navitassolar®
conserve | sustain | flourish



navitas G12R

132 half-cut cell

N-Type Bi-Facial Dual Glass Module

Model Type: NSG-BFT132-G12R-605 W ~ 645 W

Certifications: ALMM APPROVED, CE

Warranty: 12 Years Product Warranty, 30 Years Performance Warranty

- Ideal for large and small scale installations
- High power
- Better shading tolerance
- Lower LCOE & system cost
- Excellent temperature performance
- Non-destructive cutting

Module Efficiency up to 24%

Positive Tolerance up to +4.99 W

30 Years Performance Warranty[1]

12 Years Product Warranty[1]

PID Resistant

Product Certifications

IS 14286*, IS 61730-1 & 2*, IS 62804* IEC 61701*, Fire Rating *BIS* ISO 9001, 14001, 45001

*In Process

MECHANICAL DIMENSIONS

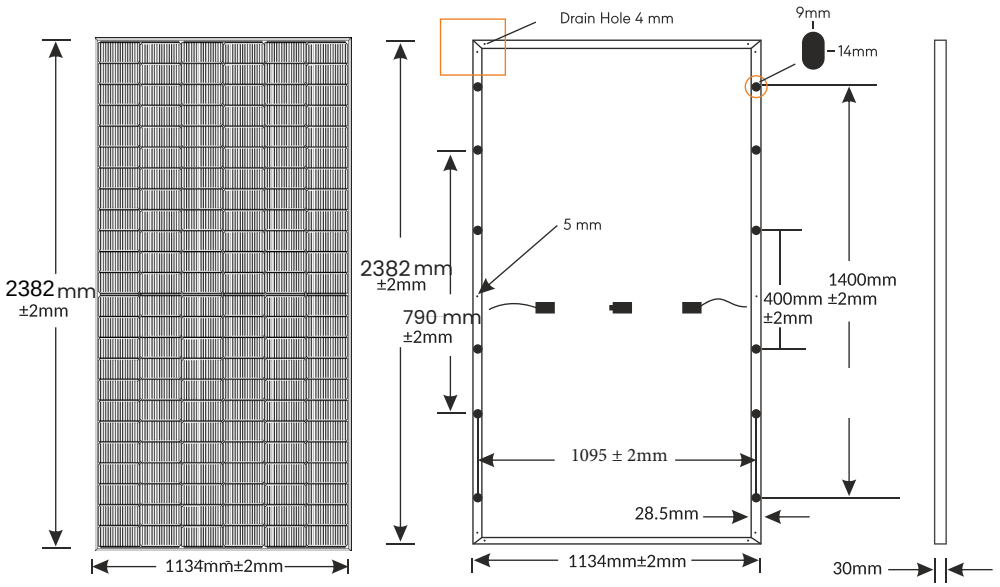

All mounting hole- 9x14mm- 12nos
All ground hole- 5.5 mm dia- 4 Nos

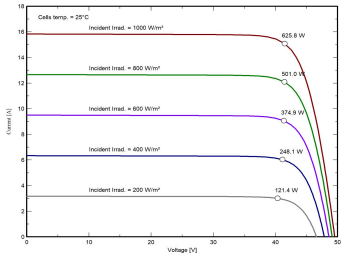

Note: for Ref - 625wp

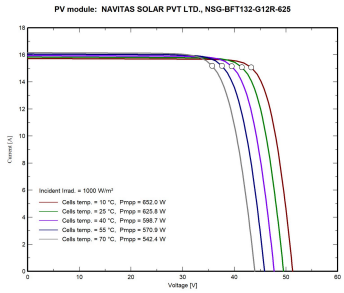

ELECTRICAL DATA

Module Type	NSG-BFT132-G12R-605		NSG-BFT132-G12R-610		NSG-BFT132-G12R-615		NSG-BFT132-G12R-620		NSG-BFT132-G12R-625		NSG-BFT132-G12R-630		NSG-BFT132-G12R-635		NSG-BFT132-G12R-640		NSG-BFT132-G12R-645	
	STC	NOCT	STC	NOCT	STC	NOCT	STC	NOCT	STC	NOCT	STC	NOCT	STC	NOCT	STC	NOCT	STC	NOCT
Pmax	605	456	610	460	615	464	620	468	625	471	630	475	635	479	640	483	645	487
Vmp	40.6	38.57	40.8	38.76	41	38.95	41.2	39.14	41.4	39.33	41.6	39.52	41.8	39.71	42	39.9	42.2	40.09
Imp	14.91	11.83	14.96	11.87	15.01	11.91	15.06	11.95	15.11	11.99	15.16	12.03	15.21	12.07	15.26	12.11	15.3	12.14
Voc	47.8	45.41	48	45.6	48.2	45.79	48.4	45.98	48.6	46.17	48.8	46.36	49	46.55	49.2	46.74	49.4	46.93
Isc	15.91	12.84	15.97	12.89	16.03	12.94	16.08	12.98	16.14	13.03	16.2	13.08	16.26	13.13	16.32	13.17	16.38	13.22
Module Eff	22.4		22.6		22.8		23.0		23.1		23.3		23.5		23.7		23.9	

Operating Temperature (°C)	-40°C ~ +85°C
Maximum System Voltage	1500 V DC (IEC)
Maximum series fuse rating	35A

- STC — Irradiance 1000 W/m² — Cell Temperature 25°C — AM = 1.5
- NOCT — Irradiance 800 W/m² — Ambient Temperature 25°C — AM = 1.5 — Wind Speed = 1 m/s

MECHANICAL DATA

Specification	Data
Cell Type	N-type Crystalline
External Dimension	2382mm x 1134mm x 30mm
Cell Arrangement	66 cell N-type ,132 half cells
Cell size	105 x 182.3 mm
Weight	33kg
Front Cover	2.0mm ARC Glass
Rear Cover	2.0 mm Semi Tempered Glass
Frame Material	Anodized Aluminium Alloy
Junction Box	IP68 split JB
Cable	4mm² (IEC) -400mm Positive Side and 200mm Negative Side/ Customized
Connectors	MC4 Compatible
By-Pass Diodes	3 Pcs
Mechanical Load	5400Pa/2400Pa

REAR SIDE POWER GAIN

Module Type		605	610	615	620	625	630	635	640	645	650	655
5%	Max Power	635.25	640.5	645.75	651	656.25	661.5	666.75	672	677.25	682.5	687.75
	Efficiency	23.52%	23.71%	23.91%	24.10%	24.29%	24.49%	24.68%	24.88%	25.07%	25.27%	25.46%
15%	Max Power	695.75	701.5	707.25	713	718.75	724.5	730.25	736	741.75	747.5	753.25
	Efficiency	25.76%	25.97%	26.18%	26.40%	26.61%	26.82%	27.03%	27.25%	27.46%	27.67%	27.89%
25%	Max Power	756.25	762.5	768.75	775	781.25	787.5	793.75	800	806.25	812.5	818.75
	Efficiency	28.00%	28.23%	28.46%	28.69%	28.92%	29.15%	29.39%	29.62%	29.85%	30.08%	30.31%

APPLICATION CONDITIONS

Maximum System Voltage	DC1500V (IEC)
Maximum Series Fuse Rating	35A
Operating Temperature	-40°C - +85°C
Mechanical Load	5400Pa/2400Pa
Hail Test	25mm diameter hail at 23m/s
Bifaciality	80±5%
Application Rating	Class A

TEMPERATURE CHARACTERISTIC

Specification	Data
Temperature Co-efficient (Pmax)	-0.29%/C
Temperature Co-efficient (Voc)	-0.25%/C
Temperature Co-efficient (Isc)	+0.045%/C
Nominal Operating Cell Temperature	45±2°C
Degradation	1st year 1% 2nd year 0.40% (onward every year)

NAVITAS PERFORMANCE WARRANTY

12 Years Product Warranty - **30** Years Linear Power Warrant

Yearly degradation 1st to 30th year

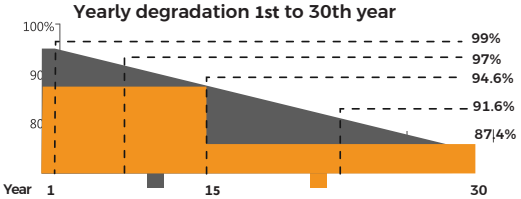

www.navitassolar.com
sales@navitassolar.com
+91 70690 70990